OPTIMUM®
MASCHINEN - GERMANY

Assembly instruction

MSU 3 3352990

MSU 4 3352991

Machine base

Technical specifications

Fastening

Assembly

Bauteile Maschinenunterbau - Machine base components

Abmessung - Dimension

Machine base

MSU 3

1 Machine base

1.1 Technical specifications

Type	Machine base with 3 drawers
Material of the base area	Glued wood panel 650 x 640 mm
Machine base dimensions	☞ Abmessung - Dimension on page 3
Net weight of MSU 3 base	47 kg
Net weight of MSU 4 base	55.5 kg
Load capacity of a drawer	45 kg
Load capacity of the machine platform	150 kg

At the time of writing this description suitable for small bench drills with a maximum weight up to 150 kg including workpiece. The greater the machine weight, the greater the load on the wheels and their service life.

1.2 Fastening

Place the bench drill on the machine base, align it and screw it to the wooden plate.

Required screws:

(not included)

Use chipboard screws or wood screws with washers.

CAUTION!

When operating the bench drill, always make sure that the parking brake on the two front wheels is activated.

1.3 Assembly

The two steerable locking wheels (1) are mounted at the front. The other two wheels (2) without brakes are mounted at the rear. Secure the wheels with the 16 M8 screws supplied.

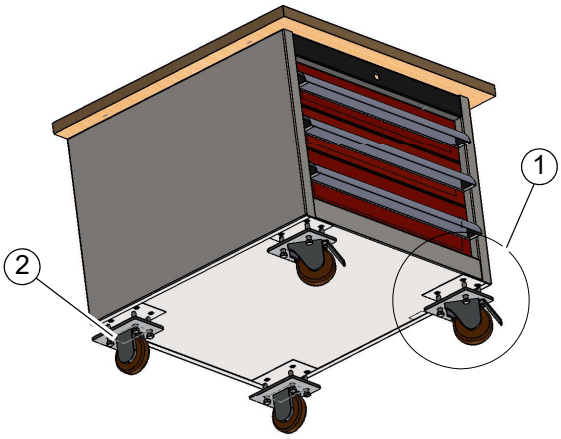

machine-base_3352990_3352991_GB.fm

2 Bauteile Maschinenunterbau - Machine base components

Pos.	Bezeichnung	*Designation*	Anzahl *Amount*	Artikel Nr. *Part no.*
1	Tischplatte MSU3-MSU4	Table plate	1	0335299001
2	Schubladenrahmen MSU3	Drawer frame	1	0335299002
2	Schubladenrahmen MSU4	Drawer frame	1	0335299102
3	Schublade	Drawer	3	0335299003
4	Rad drehbar + Bremse	Wheel rotatable + brake	2	0335299004
5	Rad fest	Fixed wheel	2	0335299005
6	Eindrehmuffe Holz	Wood screw-in socket	5	0335299006
7	Schraube M8x16	Screw M8x16	5	0335299007
8	Schraube M8x20	Screw M8x20	20	0335299008

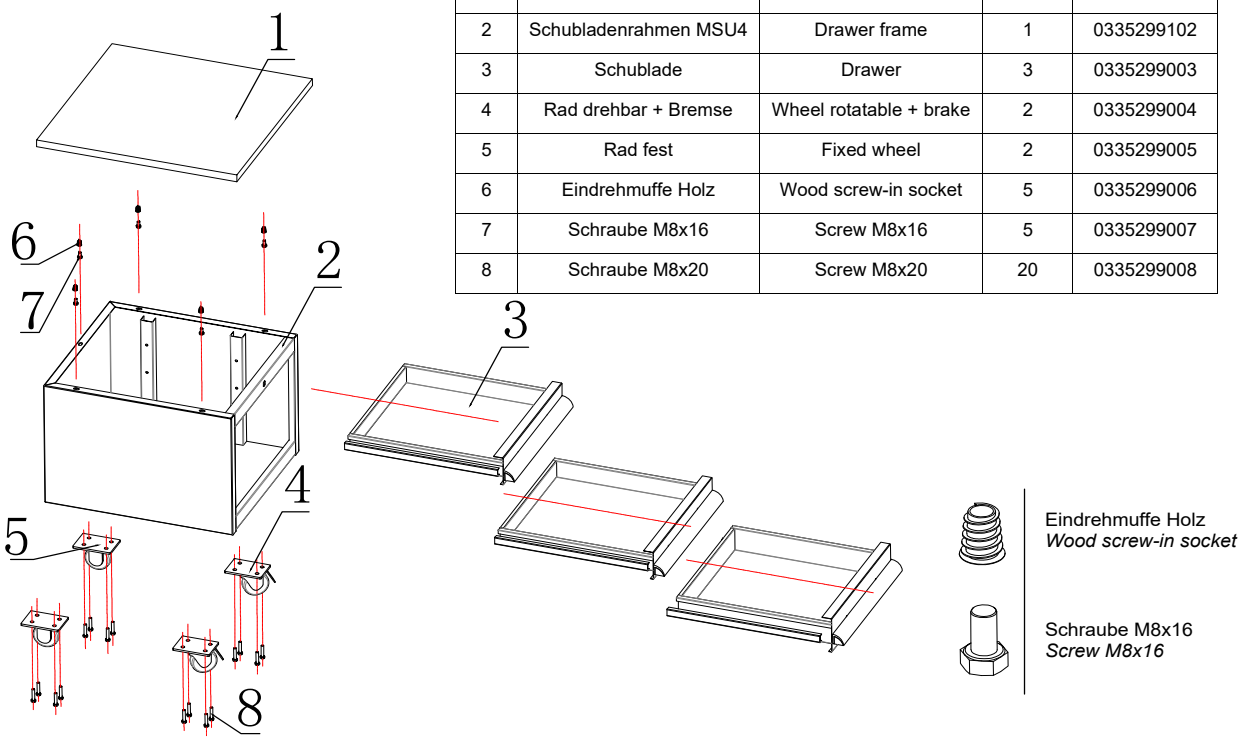

Abb.2-1: 3352990

INFORMATION

Ersatzschlüssel für das Schloß können nicht nachbestellt werden. Im Bedarfsfall muss das Schloss betreiberseitig komplett ausgetauscht werden.

Replacement keys for the lock cannot be reordered. If necessary, the lock must be completely replaced by the operator.

2.1 Abmessung - Dimension

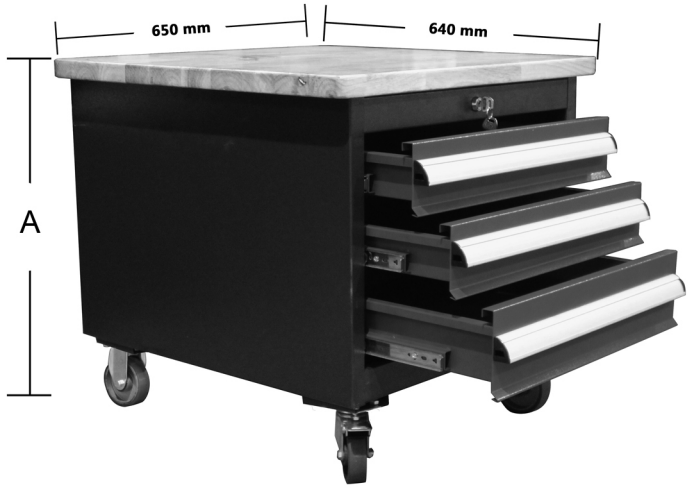

MSU3 - A - 630mm
MSU4 - A - 810mm

machine-base_parts_3352990_3352991.fm